Work Order ID 70159

Monday, May 30, 2011 12:42:32 PM

Item ID: D4149-041 **Accept** **Setup Start** **Stop**

Revision ID:

Item Name: Crosstube Lug Assembly, Aft

Start Date: 5/30/2011 **Start Qty:** 4.00 **Cust Item ID:**

Required Date: 6/8/2011 **Req'd Qty:** 4.00 **Customer:**

Reference:

Approvals: **Process Plan:** _____ **Date:** 11-05-20 **Tooling:** _____ **Date:** _____ **Run Start** **Stop**

QC: _____ **Date:** _____ **SPC (Y/N):** _____ **Date:** _____

Sequence ID/ Work Center ID	Operation Description	Set Up/ Run Hours	Tool ID	Tool #	Plan Code	Accept Qty	Reject Qty	Reject Number	Insp. Stamp
Draw Nbr	**Revision Nbr**								
D4149	C								
100		0.00							
Small Fab	**Memo**	0.00							
Small Fab	1- Assemble as per dwg								
110	QC5- Inspect part completeness to step on W/O	0.00							
QC	**Memo**	0.00							
Quality Control									
120	Identify as per dwg & Stock Location: 468	0.00							
Packaging	**Memo**	0.00							
Packaging									

11/06/06 (4)

5/06/08 (+4)

11/6/8 (4)

Dart Aerospace Ltd

W/O:		WORK ORDER CHANGES					
DATE	STEP	PROCEDURE CHANGE	By	Date	Qty	Approval Chief Eng / Prod Mgr	Approval QC Inspector

Part No: _____ PAR #: _____ Fault Category: _____ NCR: Yes No DQA: _____ Date: _____

Resolution: _____ Disposition: _____ QA: N/C Closed: _____ Date: _____

NCR:		WORK ORDER NON-CONFORMANCE (NCR)						
DATE	STEP	Description of NC Section A	Corrective Action Section B			Verification Section C	Approval Chief Eng	Approval QC Inspector
			Initial Chief Eng	Action Description Chief Eng	Sign & Date			

NOTE: Date & initial all entries

H:\fFORMS\Quality Assurance\approved QA\NCRWO RevE

Work Order ID 70159

Monday, May 30, 2011 12:42:32 PM

Item ID: D4149-041 **Accept** **Setup Start**

Revision ID: **Stop**

Item Name: Crosstube Lug Assembly, Aft

Start Date: 5/30/2011 **Start Qty:** 4.00 **Cust Item ID:**

Required Date: 6/8/2011 **Req'd Qty:** 4.00 **Customer:**

Reference:

Run Start

Approvals: **Process Plan:** _____ **Date:** _____ **Tooling:** _____ **Date:** _____

Stop

QC: _____ **Date:** _____ **SPC (Y/N):** _____ **Date:** _____

Sequence ID/ Work Center ID	Operation Description	Set Up/ Run Hours	Tool ID	Tool #	Plan Code	Accept Qty	Reject Qty	Reject Number	Insp. Stamp
130	QC21- Final Inspection - Work Order Release	0.00						W/6/8	
QC Quality Control	Memo	0.00							

MF
11-06-08

Dart Aerospace Ltd

W/O:		WORK ORDER CHANGES					
DATE	STEP	PROCEDURE CHANGE	By	Date	Qty	Approval Chief Eng / Prod Mgr	Approval QC Inspector

Part No: _____ **PAR #:** _____ **Fault Category:** _____ **NCR:** Yes No **DQA:** _____ **Date:** _____

Resolution: _____ **Disposition:** _____ **QA: N/C Closed:** _____ **Date:** _____

NCR:		WORK ORDER NON-CONFORMANCE (NCR)						
DATE	STEP	Description of NC Section A	Corrective Action Section B			Verification Section C	Approval Chief Eng	Approval QC Inspector
			Initial Chief Eng	Action Description Chief Eng	Sign & Date			

NOTE: Date & initial all entries

Picklist Print

Monday, May 30, 2011 12:42:38 PM

Work Order ID: 70159

Parent Item: D4149-041

Parent Item Name: Crosstube Lug Assembly, Aft

Start Date: 5/30/2011 **Required Date:** 6/8/2011

Start Qty: 4.00 **Required Qty:** 4.00

Comments: IPP Rev:A 10.06.24 new issue DD verf:EC□
IPP Rev:B 10.07.22 as per revB DD verf:JLM IPP Rev:C
11.03.03 as per revC DD verf:JLM

Component Item ID/ Item Name	Replacement Item ID	Mfg/ Purch	Bin Item	Primary Location	Last Location	Route Seq ID	Unit of Measure	Qty on Hand	Qty per Kit	Total Qty	Qty Issued	Date Issued	Status
MS21043-3		Purchased	No			100	Each	452.0000	4	8			
Nut													
				Location		**Loc Qty**		**Loc Code**					
				FG		80							
					103691	80							
				ST301		372							
					112314	372				8			
MS21043-4		Purchased	No			100	Each	1,640.000	1	12			
Nut													
				Location		**Loc Qty**		**Loc Code**					
				FG		40							
					104603	40							
				ST300		512							
					117423	512				12			
				ST301		1088							
					114784	48							
					115936	40							
					117601	500							
					117793	500							

11/06/06

11/06/06

Dart Aerospace Ltd

W/O:		WORK ORDER CHANGES					
DATE	STEP	PROCEDURE CHANGE	By	Date	Qty	Approval Chief Eng / Prod Mgr	Approval QC Inspector

Part No: _____ PAR #: _____ Fault Category: _____ NCR: Yes No DQA: _____ Date: _____

Resolution: _____ Disposition: _____ QA: N/C Closed: _____ Date: _____

NCR:		WORK ORDER NON-CONFORMANCE (NCR)						
DATE	STEP	Description of NC Section A	Corrective Action Section B			Verification Section C	Approval Chief Eng	Approval QC Inspector
			Initial Chief Eng	Action Description Chief Eng	Sign & Date			

NOTE: Date & initial all entries

Picklist Print

Monday, May 30, 2011 12:42:38 PM

Work Order ID: 70159

Parent Item: D4149-041

Parent Item Name: Crosstube Lug Assembly, Aft

Start Date: 5/30/2011 **Required Date:** 6/8/2011

Start Qty: 4.00 **Required Qty:** 4.00

D3910-1	Manufactured	No	100	Each	18.0000	1	4	11/06/06
Crosstube Lug								

Location	Loc Qty	Loc Code	
st507	18		
68263	2		
68867	16		4

D4091-1	Manufactured	No	100	Each	3.0000	1	4	11/06/06
Mounting Lug								

Location	Loc Qty	Loc Code	
ST460	3		
68868	3		3

369605 (R)

D4149-1	Manufactured	No	100	Each	16.0000	2	8	11/06/06
Crosstube Lug Plate, Aft								

Location	Loc Qty	Loc Code	
ST133	16		
68869	1		1
69604	15		7

D4149-3	Manufactured	No	100	Each	13.0000	1	4	11/06/06
Spacer								

Location	Loc Qty	Loc Code	
ST133	13		
68870	13		4

Dart Aerospace Ltd

W/O:		WORK ORDER CHANGES					
DATE	STEP	PROCEDURE CHANGE	By	Date	Qty	Approval Chief Eng / Prod Mgr	Approval QC Inspector

Part No: _____ **PAR #:** _____ **Fault Category:** _____ **NCR:** Yes No **DQA:** _____ **Date:** _____

Resolution: _____ **Disposition:** _____ **QA: N/C Closed:** _____ **Date:** _____

NCR:		WORK ORDER NON-CONFORMANCE (NCR)						
DATE	STEP	Description of NC Section A	Corrective Action Section B			Verification Section C	Approval Chief Eng	Approval QC Inspector
			Initial Chief Eng	Action Description Chief Eng	Sign & Date			

NOTE: Date & initial all entries

Picklist Print

Monday, May 30, 2011 12:42:39 PM

Work Order ID: 70159

Parent Item: D4149-041

Parent Item Name: Crosstube Lug Assembly, Aft

Start Date: 5/30/2011 **Required Date:** 6/8/2011

Start Qty: 4.00 **Required Qty:** 4.00

D4149-5	Manufactured	No	100	Each	16.0000	1	4	11/06/06
Eyebolt Stud								

Location	Loc Qty	Loc Code	
ST133	16		
68871	16		4

AN3C12A	Purchased	No	100	Each	72.0000	2	8	11/06/06
Bolts								

Location	Loc Qty	Loc Code	
ST351	72		
116924	6		
117514	36		8
117794	30		

AN4C13A	Purchased	No	100	Each	93.0000	3	12	11/06/06
BOLT								

Location	Loc Qty	Loc Code	
ST357	90		
114615	32		12
116199	8		
117793	50		
ST361	3		
117688	3		

MS20615-4M18	Purchased	No	100	Each	218.0000	3	12	11/06/06
Rivet								

Location	Loc Qty	Loc Code	
ST323	218		
117411	218		12

Dart Aerospace Ltd

W/O:		WORK ORDER CHANGES					
DATE	STEP	PROCEDURE CHANGE	By	Date	Qty	Approval Chief Eng / Prod Mgr	Approval QC Inspector

Part No: _____ PAR #: _____ Fault Category: _____ NCR: Yes No DQA: _____ Date: _____

Resolution: _____ Disposition: _____ QA: N/C Closed: _____ Date: _____

NCR:		WORK ORDER NON-CONFORMANCE (NCR)						
DATE	STEP	Description of NC Section A	Corrective Action Section B			Verification Section C	Approval Chief Eng	Approval QC Inspector
			Initial Chief Eng	Action Description Chief Eng	Sign & Date			

NOTE: Date & initial all entries

H:\fFORMS\Quality Assurance\approved QA\NCRWO RevE

Picklist Print

Monday, May 30, 2011 12:42:39 PM

Work Order ID: 70159

Parent Item: D4149-041

Parent Item Name: Crosstube Lug Assembly, Aft

Start Date: 5/30/2011 **Required Date:** 6/8/2011

Start Qty: 4.00 **Required Qty:** 4.00

NAS1149C0332R Purchased No 100 Each 2,182.000 4 16

Washer

11/06/06

Location	Loc Qty	Loc Code
ST297	2182	
116304	55	
117291	1527	
117460	600	

16

NAS1149C0432R Purchased No 100 Each 6,014.000 6 24

Washer

11/06/06

Location	Loc Qty	Loc Code
ST297	6014	
116900	1014	
117291	5000	

24

Dart Aerospace Ltd

W/O:		WORK ORDER CHANGES					
DATE	STEP	PROCEDURE CHANGE	By	Date	Qty	Approval Chief Eng / Prod Mgr	Approval QC Inspector

Part No: _____ **PAR #:** _____ **Fault Category:** _____ **NCR:** Yes No **DQA:** _____ **Date:** _____

Resolution: _____ **Disposition:** _____ **QA: N/C Closed:** _____ **Date:** _____

NCR:		WORK ORDER NON-CONFORMANCE (NCR)						
DATE	STEP	Description of NC Section A	Corrective Action Section B			Verification Section C	Approval Chief Eng	Approval QC Inspector
			Initial Chief Eng	Action Description Chief Eng	Sign & Date			

NOTE: Date & initial all entries

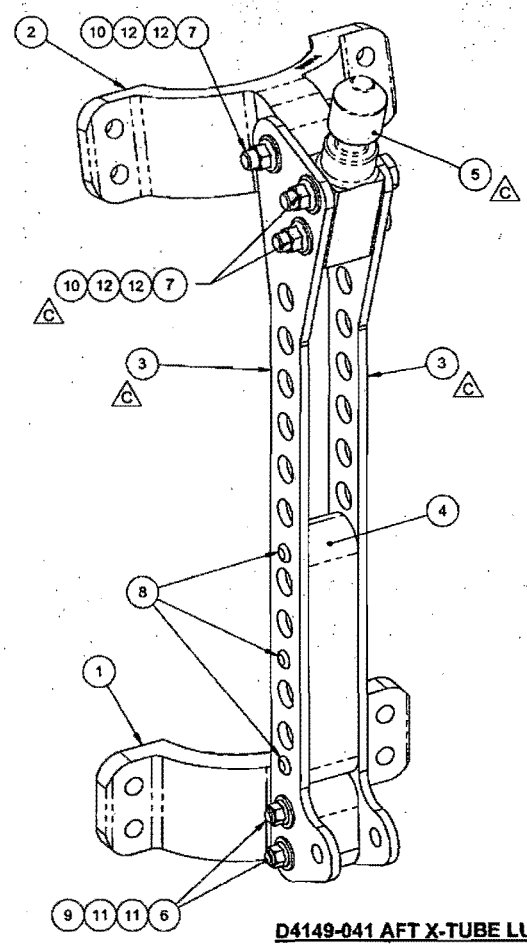

D4149-041 AFT X-TUBE LUG ASSY

ITEM	QTY -041	P/N	DESCRIPTION
	X	D4149-041	AFT X-TUBE LUG ASSY
1	1	D3910-1	X-TUBE LUG
2	1	D4091-1	MOUNTING LUG
3	2	D4149-1	AFT X-TUBE LUG PLATE
4	1	D4149-3	SPACER
5	1	D4149-5	EYEBOLT STUD
6	2	AN3C12A	BOLT
7	3	AN4C13A	BOLT
8	3	MS20615-4M18	RIVET
9	2	MS21043C3	NUT
10	3	MS21043C4	NUT
11	4	NAS1149C0332R	WASHER
12	6	NAS1149C0432R	WASHER

C

SHOP COPY
RETURN TO
ENGINEERING
UNCONTROLLED COPY
SUBJECT TO AMENDMENT
WITHOUT NOTICE
WORK ORDER
NO. 70159
RD 11-05-30

RELEASED
2011-02-24

NOTES:
1) MATERIAL: N/A
2) FINISH: NONE
3) TOLERANCES: PER DART QSI 018 UNLESS OTHERWISE NOTED
4) UNITS: INCHES UNLESS OTHERWISE NOTED
5) BREAK SHARP EDGES: N/A
6) IDENTIFICATION: IDENTIFY WITH DART P/N "D4149-041" USING FINE POINT PERMANENT INK MARKER
7) WEIGHT: 2.21 lbs

REV.	DESCRIPTION	BY	DATE
C	HOLE DIA CHANGED TO 0.252" (D8-3); HOLE DIA CHANGED TO 0.250" (C8-5); REPLACED QTY(2) AN3C12A, MS21043C3 AND QTY(4) NAS1149C0332R WITH QTY(2) AN4C13A, MS21043C4 AND QTY(4) NAS1149C0432R (D3-1,D7-2)	SC	11.02.22
B	MS20615-4M18 WAS MS20615-4M20 (ZN D3-1 & B7-2); ADDED D4149-5 (SHT 5); D4149-5 WAS D3909-5 (ZN D3-1 & D7-2); REPLACED QTY(3) MS20615-4M18 WITH QTY(2) EACH AN3C12A, MS21043-3 AND QTY(4) NAS1149C0332R WASHER (ZN D3-1, C7-1, B7-2 & B3-2); Ø0.191 2 PL REPLACES Ø0.129 3 PL (ZN D8-3). REASON: SEE TR-D350-607-2 REV. B.	MB	10.06.05
A	NEW ISSUE	MB	10.06.18

DESIGN	MB	**DART AEROSPACE LTD** HAWKESBURY, ONTARIO, CANADA
DRAWN	SC	
CHECKED		DRAWING NO. D4149 — REV. C — SHEET 1 OF 5
MFG. APPR.		
APPROVED		TITLE: AFT X-TUBE LUG ASSY — SCALE: NTS
DE APPR.		
DATE	11.02.22	

COPYRIGHT © 2010 BY DART AEROSPACE LTD
THIS DOCUMENT IS PRIVATE AND CONFIDENTIAL AND IS SUPPLIED ON THE EXPRESS CONDITION THAT IT IS NOT TO BE USED FOR ANY PURPOSE OR COPIED OR COMMUNICATED TO ANY OTHER PERSON WITHOUT WRITTEN PERMISSION FROM DART AEROSPACE LTD.

Dart Aerospace Ltd

W/O:		WORK ORDER CHANGES					
DATE	STEP	PROCEDURE CHANGE	By	Date	Qty	Approval Chief Eng / Prod Mgr	Approval QC Inspector

Part No: _____ **PAR #:** _____ **Fault Category:** _____ **NCR:** Yes No **DQA:** _____ **Date:** _____

Resolution: _____ **Disposition:** _____ **QA: N/C Closed:** _____ **Date:** _____

NCR:		WORK ORDER NON-CONFORMANCE (NCR)						
DATE	STEP	Description of NC Section A	Corrective Action Section B			Verification Section C	Approval Chief Eng	Approval QC Inspector
			Initial Chief Eng	Action Description Chief Eng	Sign & Date			

NOTE: Date & initial all entries

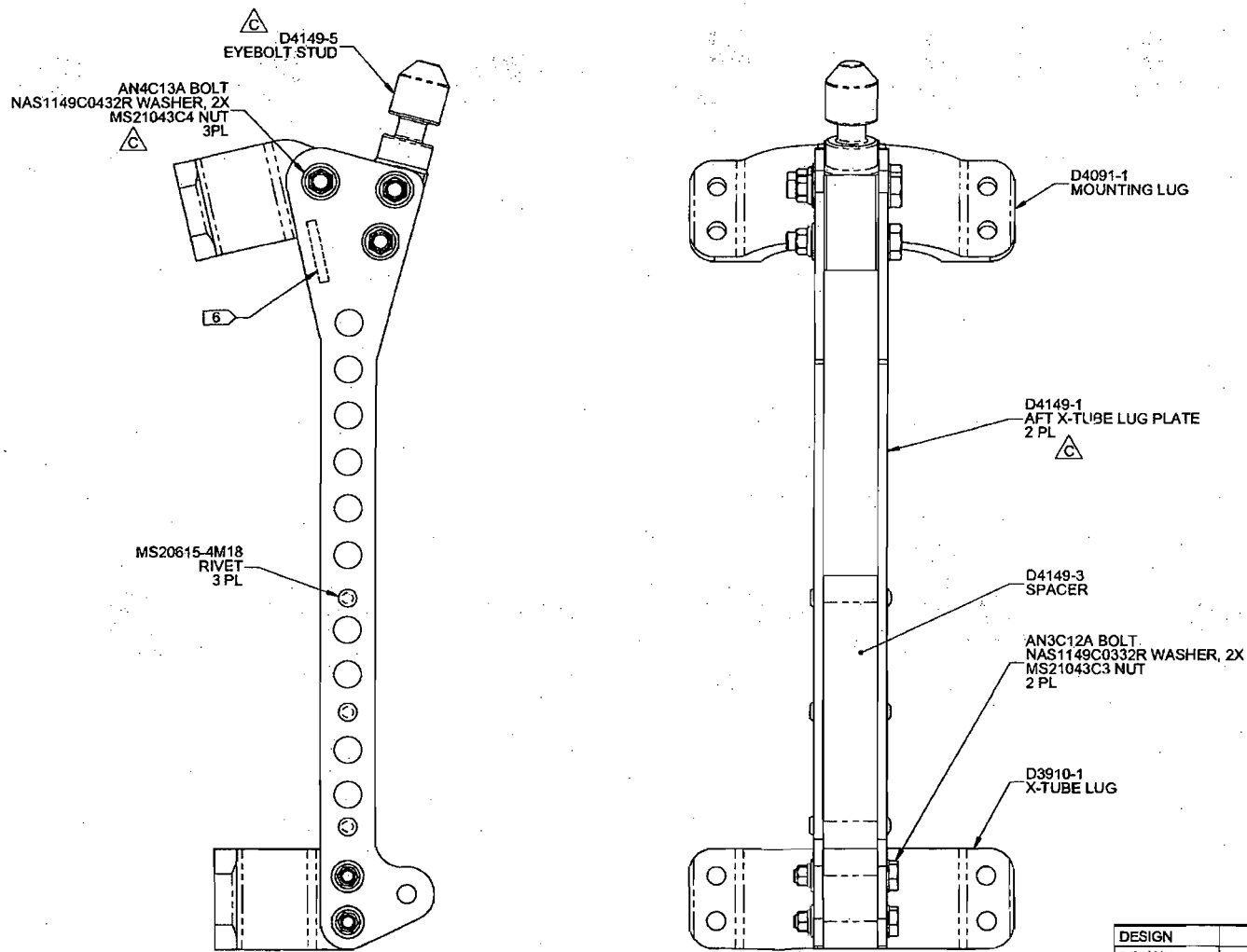

w/o 70159

RELEASED
2011-02-24

D4149-041 AFT X-TUBE LUG ASSY

DESIGN	MB	DART AEROSPACE LTD HAWKESBURY, ONTARIO, CANADA
DRAWN	SC	
CHECKED		DRAWING NO. D4149 — REV. C — SHEET 2 OF 5
MFG. APPR.		
APPROVED		TITLE: AFT X-TUBE LUG ASSY — SCALE: NTS
DE APPR.		
DATE	11.02.22	

COPYRIGHT © 2010 BY DART AEROSPACE LTD
THIS DOCUMENT IS PRIVATE AND CONFIDENTIAL AND IS SUPPLIED ON THE EXPRESS CONDITION THAT IT IS NOT TO BE USED FOR ANY PURPOSE OR COPIED OR COMMUNICATED TO ANY OTHER PERSON WITHOUT WRITTEN PERMISSION FROM DART AEROSPACE LTD.

Dart Aerospace Ltd

W/O:		WORK ORDER CHANGES					
DATE	STEP	PROCEDURE CHANGE	By	Date	Qty	Approval Chief Eng / Prod Mgr	Approval QC Inspector

Part No: _____ **PAR #:** _____ **Fault Category:** _____ **NCR:** Yes No **DQA:** _____ **Date:** _____

Resolution: _____ **Disposition:** _____ **QA: N/C Closed:** _____ **Date:** _____

NCR:		WORK ORDER NON-CONFORMANCE (NCR)						
DATE	STEP	Description of NC Section A	Corrective Action Section B			Verification Section C	Approval Chief Eng	Approval QC Inspector
			Initial Chief Eng	Action Description Chief Eng	Sign & Date			

NOTE: Date & initial all entries

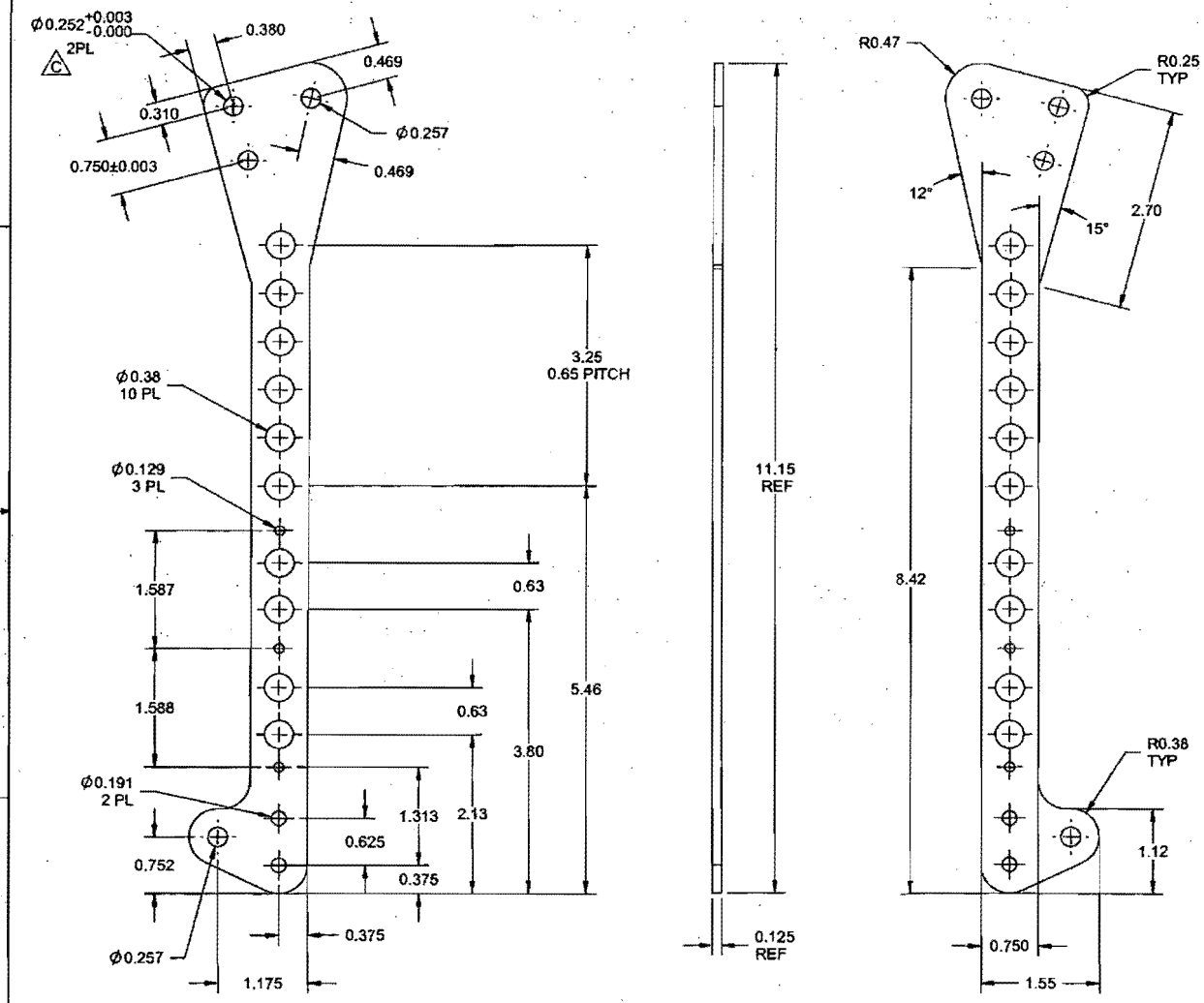

w/o 70159

RELEASED
2011-02-24

D4149-1 AFT X-TUBE LUG PLATE

NOTES:
1) MATERIAL: 303/304/316 STAINLESS STEEL 0.125" SHEET
ANNEALED 2B FINISH,
PER MIL-S-5059 OR AMS 5513/5524 OR ASTM A240
OR ASME SA240
REF DART SPEC M304S11GA OR M303S11GA
2) FINISH: NONE
3) TOLERANCES: PER DART QSI 018 UNLESS OTHERWISE NOTED
4) UNITS: INCHES UNLESS OTHERWISE NOTED
5) BREAK SHARP EDGES: 0.005 TO 0.010 MAX
6) IDENTIFICATION: NONE
7) WEIGHT: 0.33 lbs

DESIGN	MB	**DART AEROSPACE LTD** HAWKESBURY, ONTARIO, CANADA
DRAWN	SC	
CHECKED		DRAWING NO. D4149 — REV. C — SHEET 3 OF 5
MFG. APPR.		
APPROVED		TITLE: AFT X-TUBE LUG ASSY — SCALE: NTS
DE APPR.		
DATE	11.02.22	

COPYRIGHT © 2010 BY DART AEROSPACE LTD
THIS DOCUMENT IS PRIVATE AND CONFIDENTIAL AND IS SUPPLIED ON THE EXPRESS CONDITION THAT IT IS NOT TO BE USED FOR ANY PURPOSE OR COPIED OR COMMUNICATED TO ANY OTHER PERSON WITHOUT WRITTEN PERMISSION FROM DART AEROSPACE LTD.

Dart Aerospace Ltd

W/O:		WORK ORDER CHANGES					
DATE	STEP	PROCEDURE CHANGE	By	Date	Qty	Approval Chief Eng / Prod Mgr	Approval QC Inspector

Part No: _____ PAR #: _____ Fault Category: _____ NCR: Yes No DQA: _____ Date: _____

Resolution: _____ Disposition: _____ QA: N/C Closed: _____ Date: _____

NCR:		WORK ORDER NON-CONFORMANCE (NCR)						
DATE	STEP	Description of NC Section A	Corrective Action Section B			Verification Section C	Approval Chief Eng	Approval QC Inspector
			Initial Chief Eng	Action Description Chief Eng	Sign & Date			

NOTE: Date & initial all entries

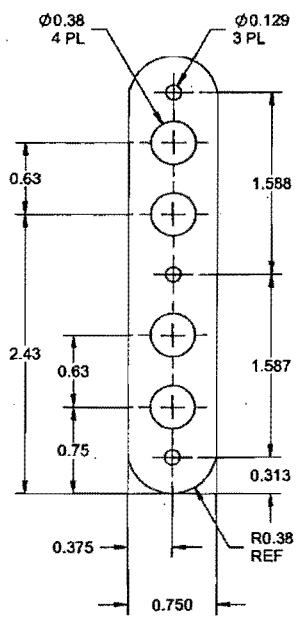

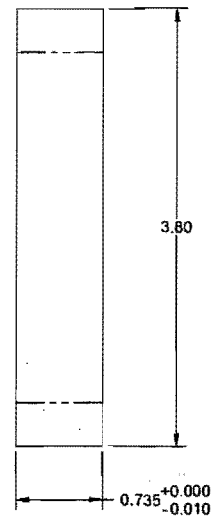

D4149-3 SPACER

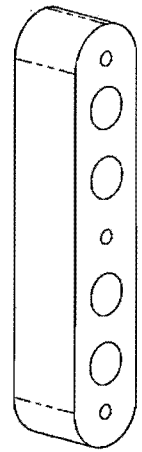

w/o 70139

RELEASED
2011 -02- 24

NOTES:
1) MATERIAL: 303/304/316 STAINLESS STEEL BAR PER ASTM A276 OR A582
REF DART SPEC MS304B OR MS303B
2) FINISH: NONE
3) TOLERANCES ARE PER DART QSI 018 UNLESS OTHERWISE NOTED
4) UNITS: INCHES UNLESS OTHERWISE NOTED
5) BREAK ALL SHARP EDGES: 0.005 TO 0.010 MAX
6) IDENTIFICATION: NONE
7) WEIGHT: 0.47 lbs

DESIGN	MB	DART AEROSPACE LTD HAWKESBURY, ONTARIO, CANADA
DRAWN	SC	
CHECKED		DRAWING NO. D4149 — REV. C — SHEET 4 OF 5
MFG. APPR.		
APPROVED		TITLE: AFT X-TUBE LUG ASSY — SCALE: NTS
DE APPR.		
DATE	11.02.22	

COPYRIGHT © 2010 BY DART AEROSPACE LTD
THIS DOCUMENT IS PRIVATE AND CONFIDENTIAL AND IS SUPPLIED ON THE EXPRESS CONDITION THAT IT IS NOT TO BE USED FOR ANY PURPOSE OR COPIED OR COMMUNICATED TO ANY OTHER PERSON WITHOUT WRITTEN PERMISSION FROM DART AEROSPACE LTD.

Dart Aerospace Ltd

W/O:		WORK ORDER CHANGES					
DATE	STEP	PROCEDURE CHANGE	By	Date	Qty	Approval Chief Eng / Prod Mgr	Approval QC Inspector

Part No: _____ **PAR #:** _____ **Fault Category:** _____ **NCR:** Yes No **DQA:** _____ **Date:** _____

Resolution: _____ **Disposition:** _____ **QA: N/C Closed:** _____ **Date:** _____

NCR:		WORK ORDER NON-CONFORMANCE (NCR)						
DATE	STEP	Description of NC Section A	Corrective Action Section B			Verification Section C	Approval Chief Eng	Approval QC Inspector
			Initial Chief Eng	Action Description Chief Eng	Sign & Date			

NOTE: Date & initial all entries

H:\fFORMS\Quality Assurance\approved QA\NCRWO RevE

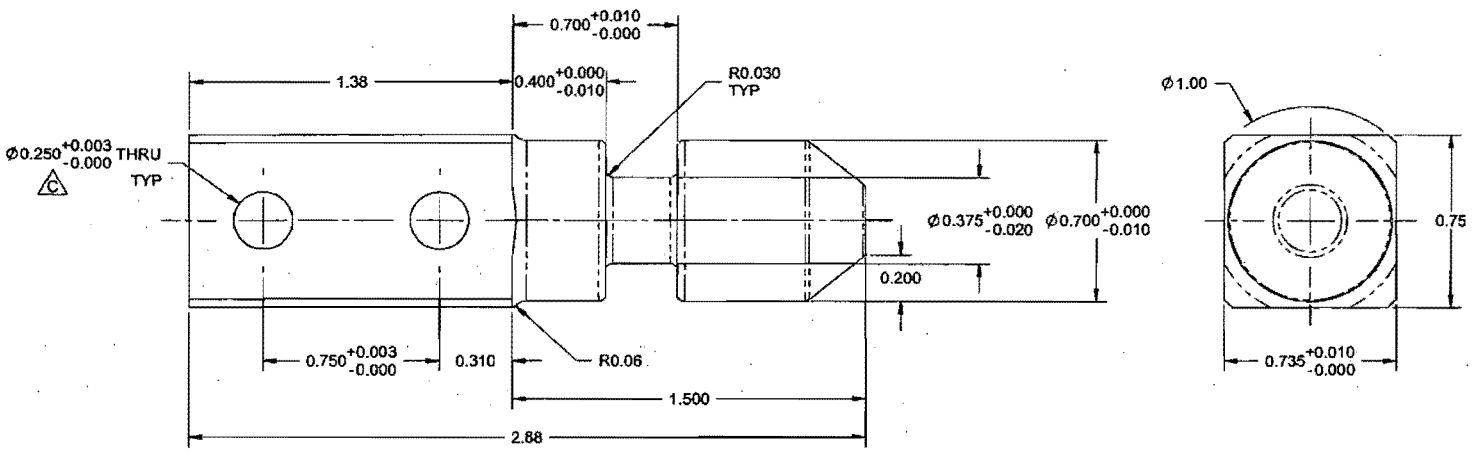

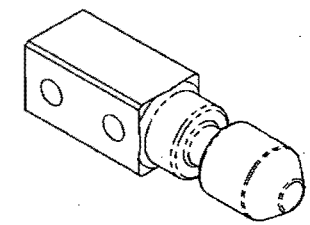

D4149-5 EYEBOLT STUD

w/o 7059

RELEASED 2011-02-24

NOTES:
1) MATERIAL: 303/304/316 STAINLESS STEEL BAR PER ASTM A276 OR A582
REF DART SPEC MS304B OR MS303B
2) FINISH: NONE
3) TOLERANCES ARE PER DART QSI 018 UNLESS OTHERWISE NOTED
4) UNITS: INCHES UNLESS OTHERWISE NOTED
5) BREAK ALL SHARP EDGES: 0.005 TO 0.010 MAX
6) IDENTIFICATION: IDENTIFY WITH DART P/N "D4149-5" USING FINE POINT PERMANENT INK MARKER
7) WEIGHT: 0.32 lbs

DESIGN	MB	**DART AEROSPACE LTD** HAWKESBURY, ONTARIO, CANADA
DRAWN	SC	DRAWING NO. D4149 — REV. C — SHEET 5 OF 5
CHECKED		
MFG. APPR.		
APPROVED		TITLE: AFT X-TUBE LUG ASSY — SCALE NTS
DE APPR.		
DATE	11.02.22	

COPYRIGHT © 2010 BY DART AEROSPACE LTD
THIS DOCUMENT IS PRIVATE AND CONFIDENTIAL AND IS SUPPLIED ON THE EXPRESS CONDITION THAT IT IS NOT TO BE USED FOR ANY PURPOSE OR COPIED OR COMMUNICATED TO ANY OTHER PERSON WITHOUT WRITTEN PERMISSION FROM DART AEROSPACE LTD.

Dart Aerospace Ltd

W/O:		WORK ORDER CHANGES					
DATE	STEP	PROCEDURE CHANGE	By	Date	Qty	Approval Chief Eng / Prod Mgr	Approval QC Inspector

Part No: _____ **PAR #:** _____ **Fault Category:** _____ **NCR:** Yes No **DQA:** _____ **Date:** _____

Resolution: _____ **Disposition:** _____ **QA: N/C Closed:** _____ **Date:** _____

NCR:		WORK ORDER NON-CONFORMANCE (NCR)						
DATE	STEP	Description of NC Section A	Corrective Action Section B			Verification Section C	Approval Chief Eng	Approval QC Inspector
			Initial Chief Eng	Action Description Chief Eng	Sign & Date			

NOTE: Date & initial all entries

H:\fFORMS\Quality Assurance\approved QA\NCRWO RevE